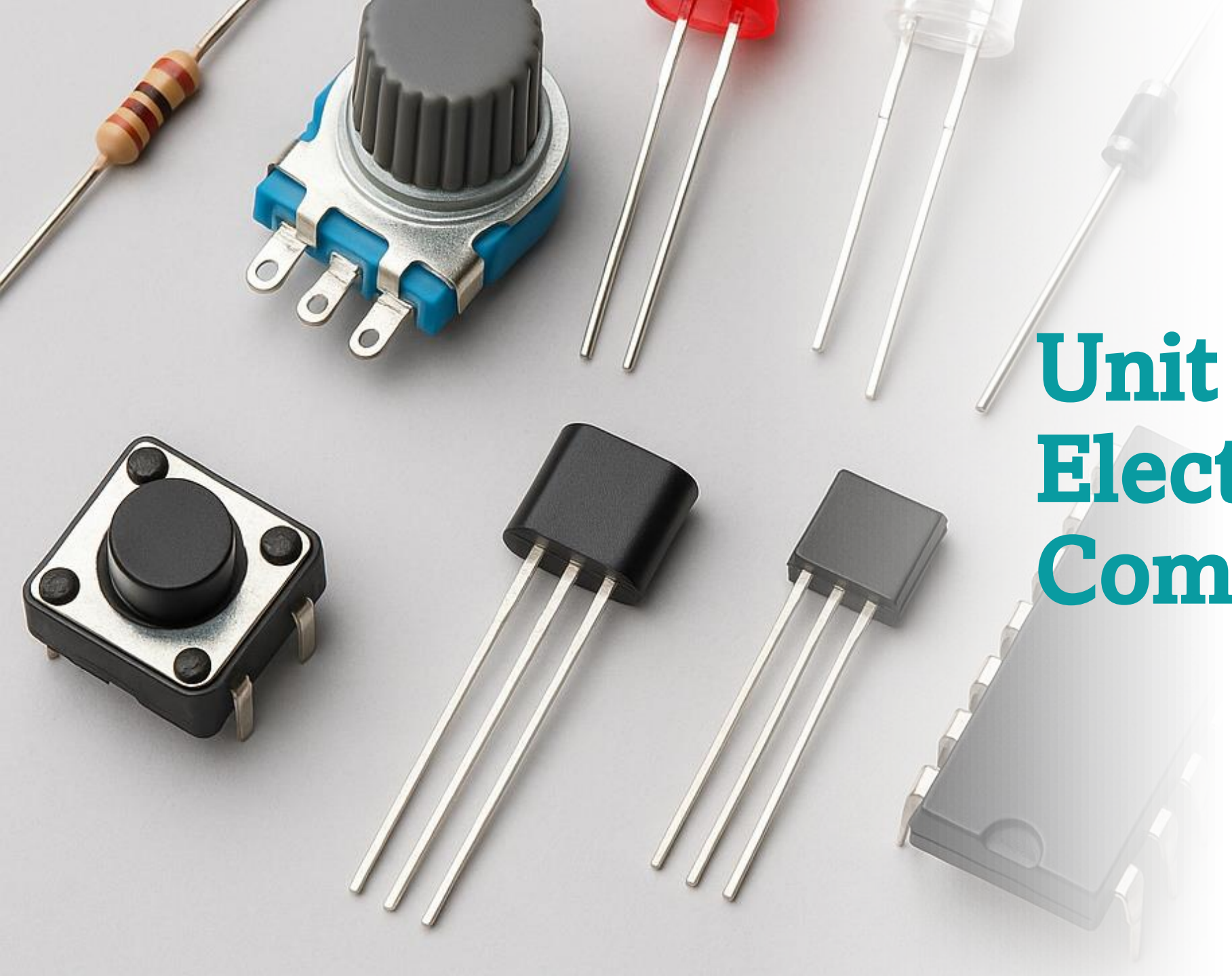

Unit 3: Electronics Components

- Electronic components are **basic building blocks** used with Arduino to create circuits.

- Components are classified into **Passive** (do not require external power) and **Active** (require power to operate).

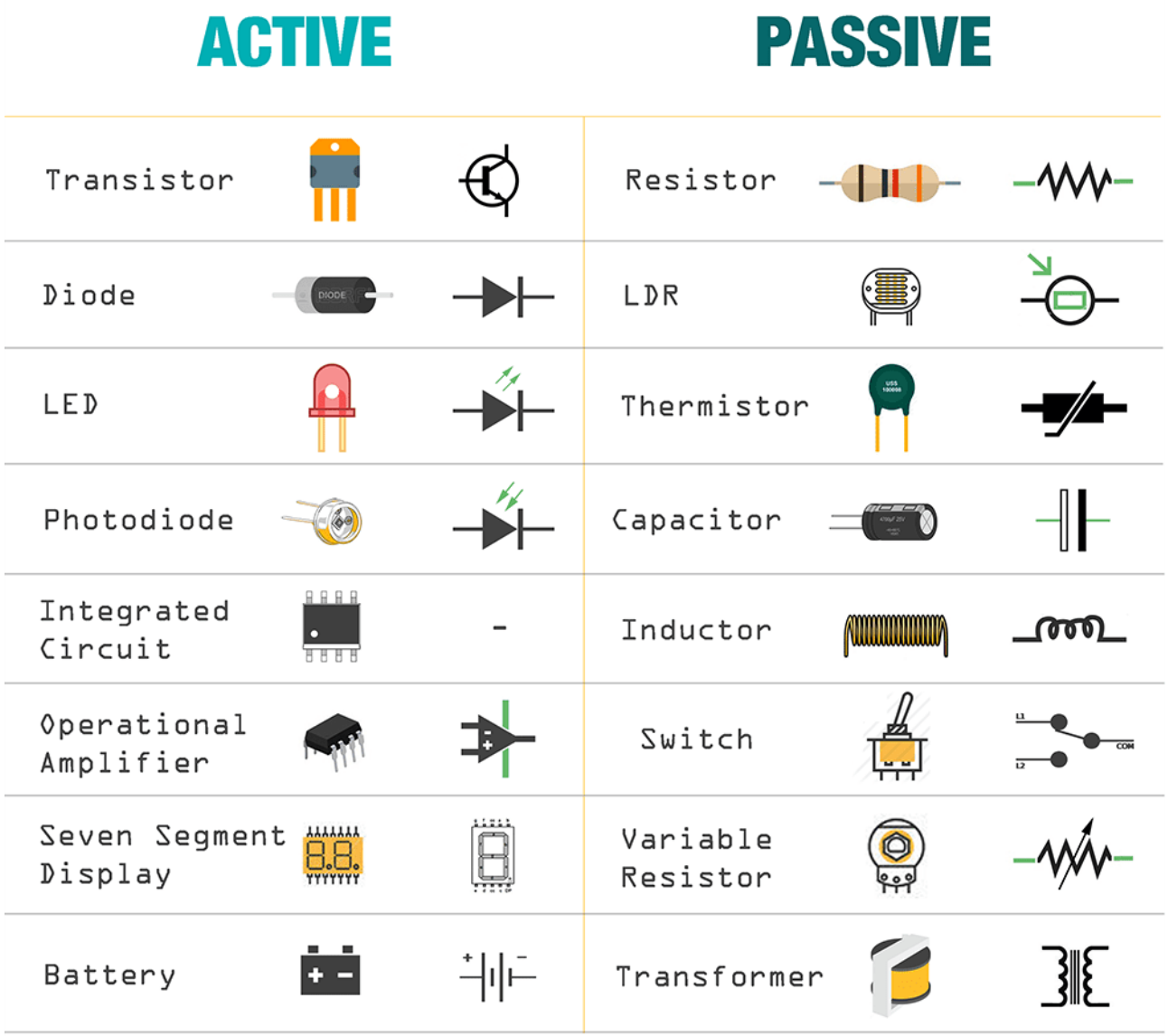

https://www.codrey.com/wp-content/uploads/2017/11/Active-and-Passive-Elements-Infographic.png

Breadboard

A breadboard is a tool used for building and testing electronic circuits without soldering. It allows components (like resistors, LEDs, sensors, etc.) and jumper wires to be easily inserted and removed for quick prototyping.

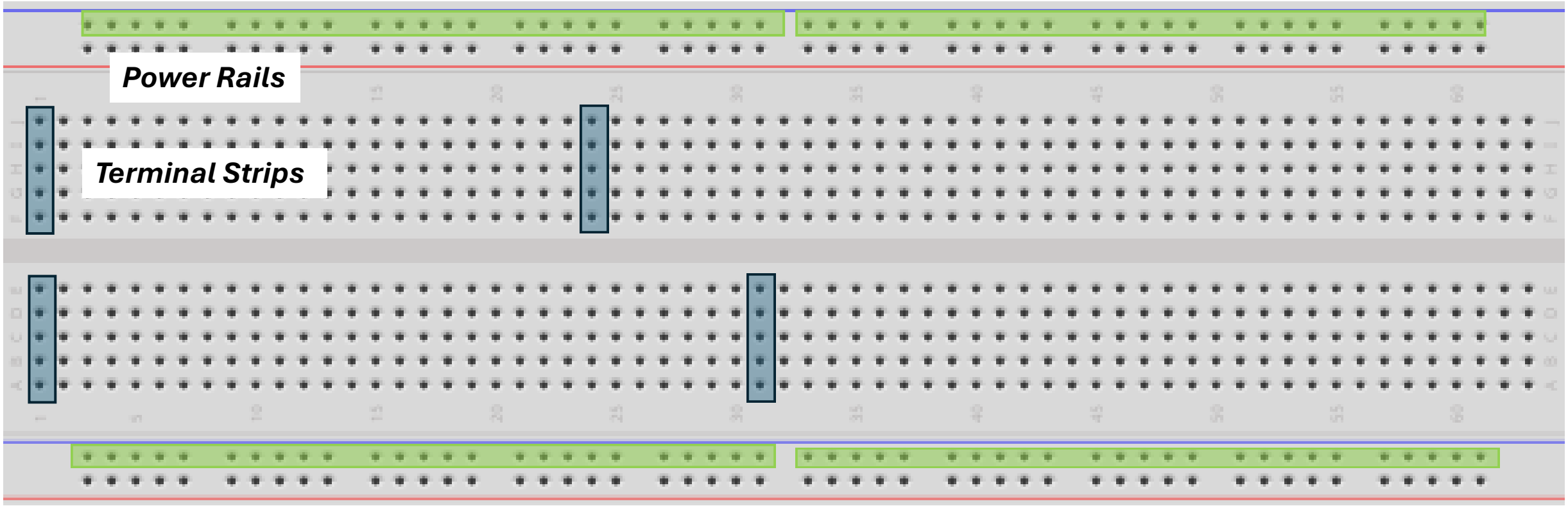

Giacomo Alessandroni, CC BY-SA 4.0 <https://creativecommons.org/licenses/by-sa/4.0>, via Wikimedia Commons

Resistors

Limit or control current flow in a circuit.

Unit: Ohm (Ω). **Symbol:**

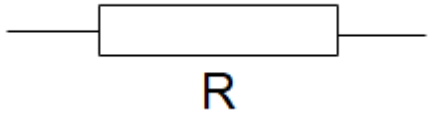

oomlout, CC BY-SA 2.0 <https://creativecommons.org/licenses/by-sa/2.0>, via Wikimedia Commons

Types:

- **Fixed resistor**
- **Variable resistor (Potentiometer)**
- **LDR (Light Dependent Resistor):** Changes resistance with light.

Arnau 944, CC BY-SA 4.0 <https://creativecommons.org/licenses/by-sa/4.0>, via Wikimedia Commons

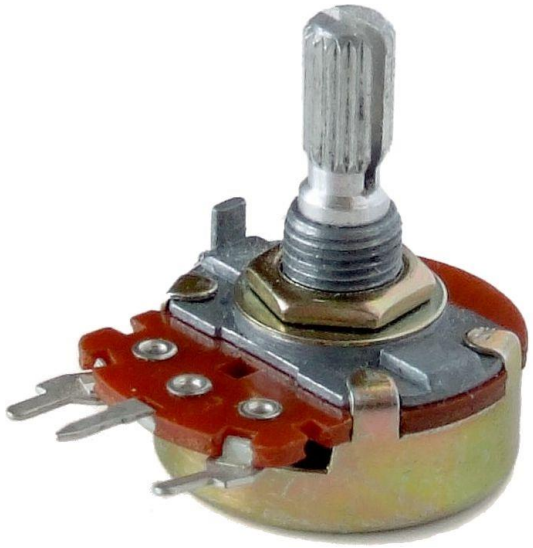

Iainf, CC BY-SA 3.0 <https://creativecommons.org/licenses/by-sa/3.0>, via Wikimedia Commons

Light Emitting Diode (LED)

Emit light when current flows.

Symbol:

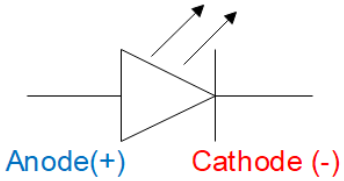

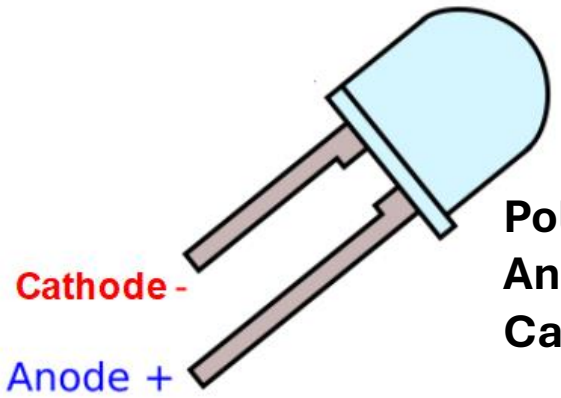

Polarity:
Anode (+) → Longer leg
Cathode (-) → Shorter leg

Green Colour LED

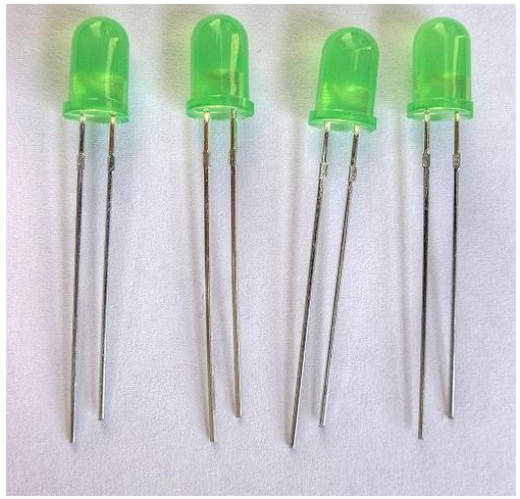

© Nevit Dilmen, CC BY-SA 3.0 <https://creativecommons.org/licenses/by-sa/3.0>, via Wikimedia Commons

Circuit Diagram

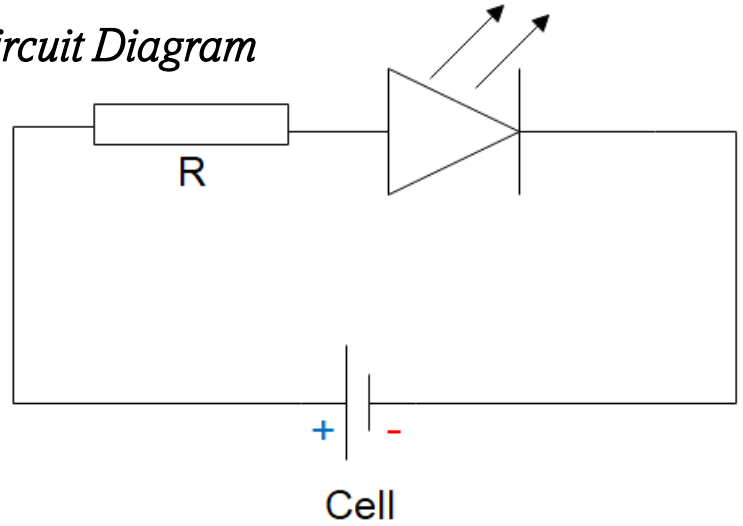

Tri Colour LED

A Tri-colour LED (commonly called an RGB LED) is a single LED package that can emit three different colours (Red, Green, Blue) by combining three separate LEDs inside it.

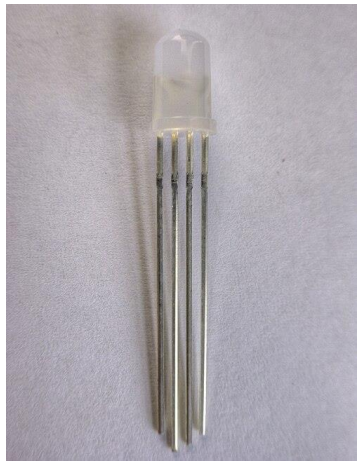

© Nevit Dilmen, CC BY-SA 3.0 <https://creativecommons.org/licenses/by-sa/3.0>, via Wikimedia Commons

Types

Common Anode

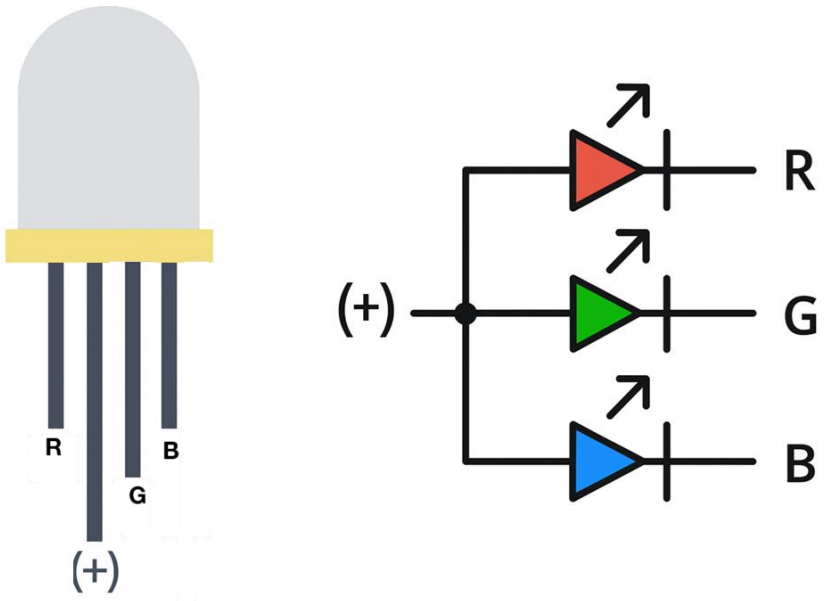

Common Cathode

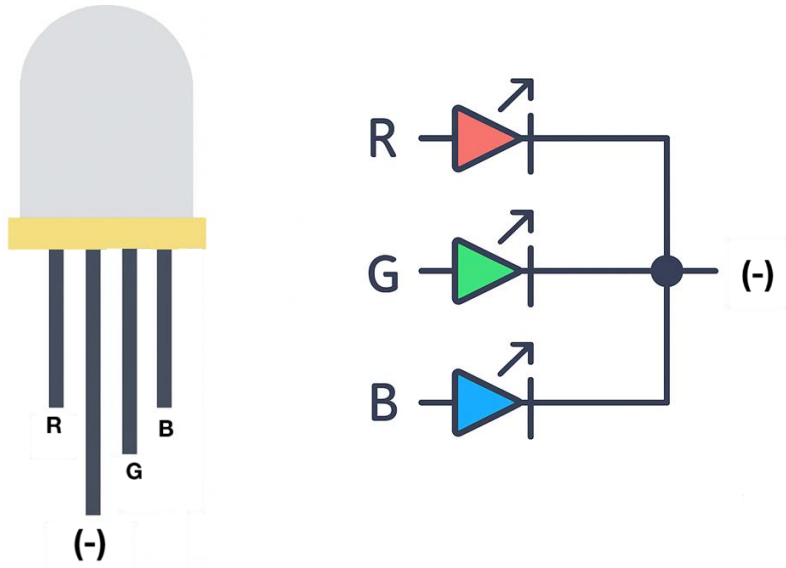

- All LED anodes (positive terminals) are connected together to **high voltage (5V).**

- All LED cathodes (negative terminals) are connected together to a **common ground**.

Push Button

Manually open or close a circuit.

Symbol:

Circuit Diagram

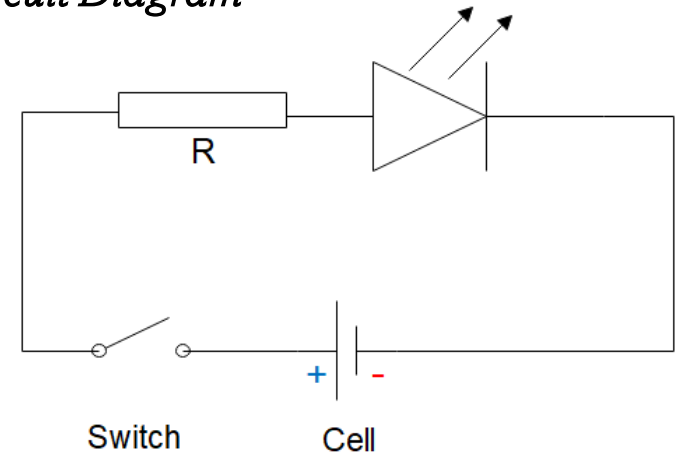

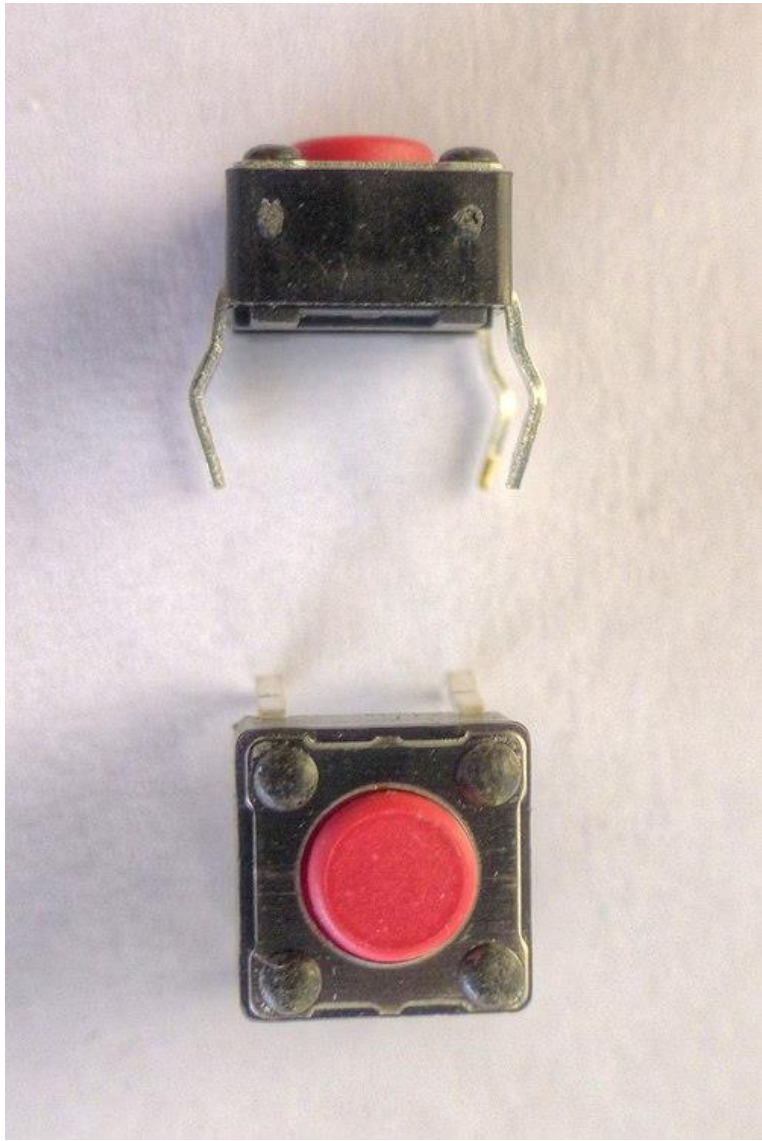

© Nevit Dilmen, CC BY-SA 3.0 <https://creativecommons.org/licenses/by-sa/3.0>, via Wikimedia Commons

LCD Display

A **16x2** LCD is a Liquid Crystal Display module capable of displaying **16** characters per line across **2** lines (total 32 characters). It is one of the most commonly used displays in Arduino projects.

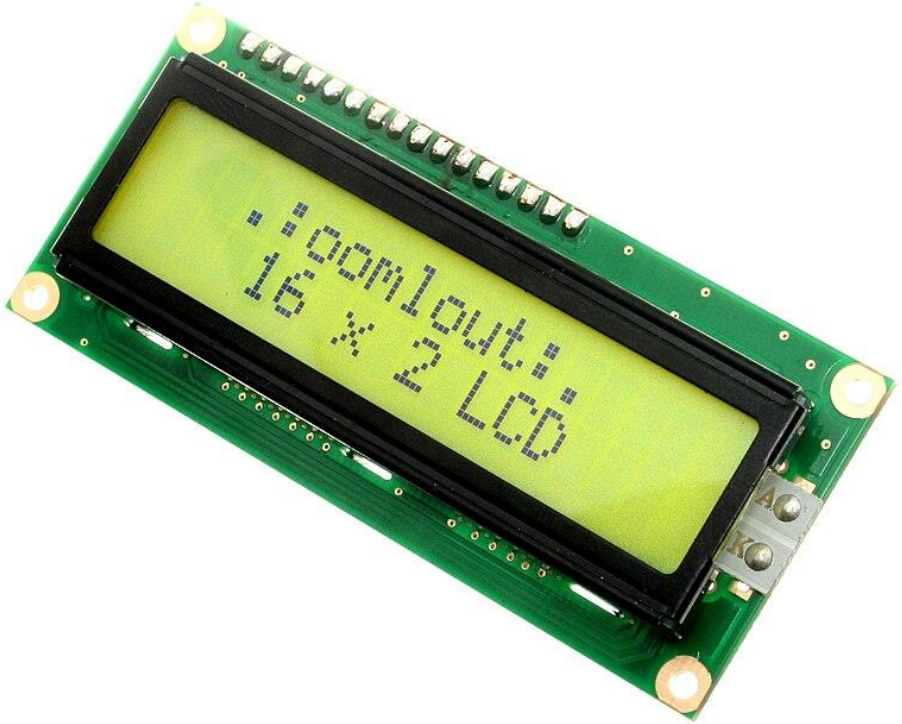

Features:

- ***Operating Voltage:*** Works on 5V DC with very low power consumption.
- ***Backlight & Contrast:*** Comes with an LED backlight and adjustable contrast (via potentiometer).
- ***Easy Interfacing:*** Uses the HD44780 controller, supporting both 4-bit and 8-bit modes for simple connection with Arduino or other microcontrollers.

oomlout, CC BY-SA 2.0 <https://creativecommons.org/licenses/by-sa/2.0>, via Wikimedia Commons

Organic Light Emitting Diode Display (OLED)

An OLED display is a thin, bright display module where each pixel emits its own light, no backlight required.
It is commonly used in Arduino projects for clear graphical or text output.

Features:

- ***High Contrast & Brightness:*** Each pixel emits its own light, giving deep blacks and excellent visibility even in low light.
- ***Low Power Consumption:*** No backlight needed; only lit pixels consume power.
- ***High Resolution & Graphics Support:*** Can display text, images, and shapes (e.g., 128×64 pixels).
- ***Wide Viewing Angle & Thin Design:*** Very slim and lightweight, with almost 180° viewing angle.

Turbospok, CC BY-SA 4.0 <https://creativecommons.org/licenses/by-sa/4.0>, via Wikimedia Commons

Seven Segment Display

A **seven-segment display** is an electronic display device used to show **decimal numbers (0–9)** and some letters using **seven individual LED segments** arranged in a specific pattern.

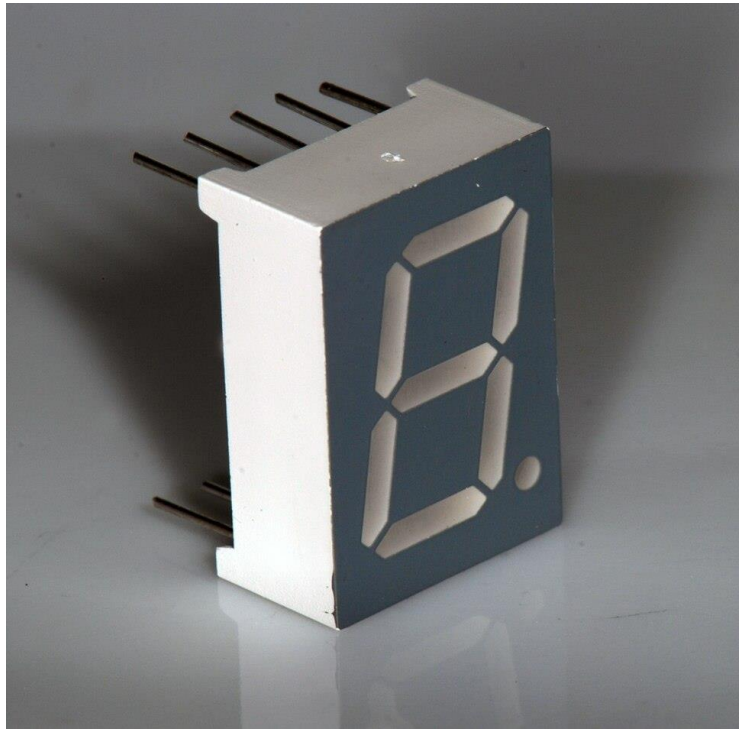

https://commons.wikimedia.org/wiki/File:Seven_segment_01_Pengo.jpg

Features:

- ***Displays Numeric Characters:*** Can show numbers 0–9 and limited letters (A, b, C, d, E, F).Low Power Consumption: Each segment is an LED that lights up individually.
- ***Available Types:***
  - Common Cathode: All cathodes connected to Groung (GND).
  - Common Anode: All anodes connected to High Voltage (V_{cc}).
- ***Easy Interfacing:*** Can be directly controlled by Arduino or via driver ICs (like 74HC595)

DC Motor

A DC Motor is an electrical machine that converts direct current (DC) electrical energy into mechanical rotational motion.

Dcaldero8983, CC BY-SA 3.0 <https://creativecommons.org/licenses/by-sa/3.0>, via Wikimedia Commons

Features

- ***Simple Operation:*** Rotates when DC voltage is applied.
- ***Direction Control:*** By reversing the polarity of the supply, the motor changes its rotation direction (clockwise or counterclockwise).
- ***Speed Control:*** Controlled by varying the supply voltage or using PWM (Pulse Width Modulation) in Arduino.
- ***Wide Usage:*** Found in fans, toys, robots, pumps, and other simple machines.

References:

- https://www.build-electronic-circuits.com/rgb-led/
- https://www.arduino.cc
- https://learn.adafruit.com/
- https://learn.sparkfun.com/tutorials/tags/arduino
- **Getting Started with Arduino (3rd Edition)** – Massimo Banzi & Michael Shiloh
  ISBN: 978-1449363338